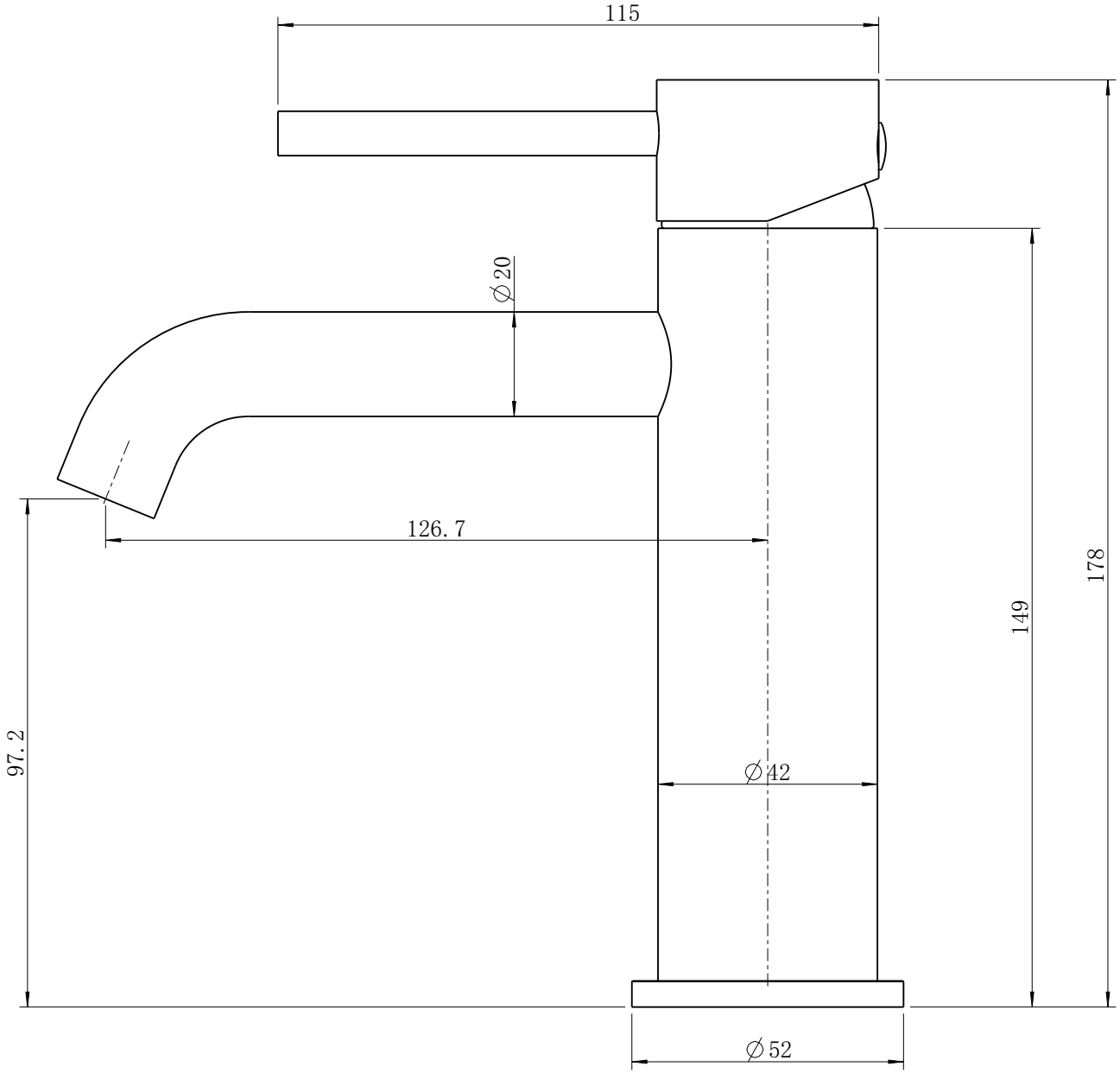
115
∅20
126.7
97.2
∅42
149
178
∅52