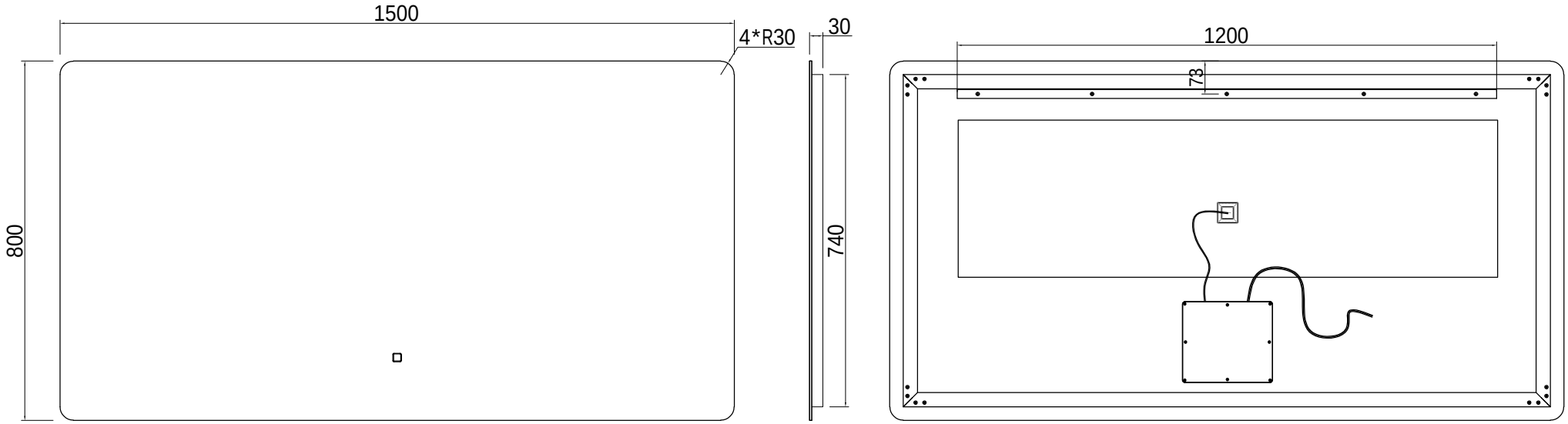

front view

side view

rear view

LMC1500x800